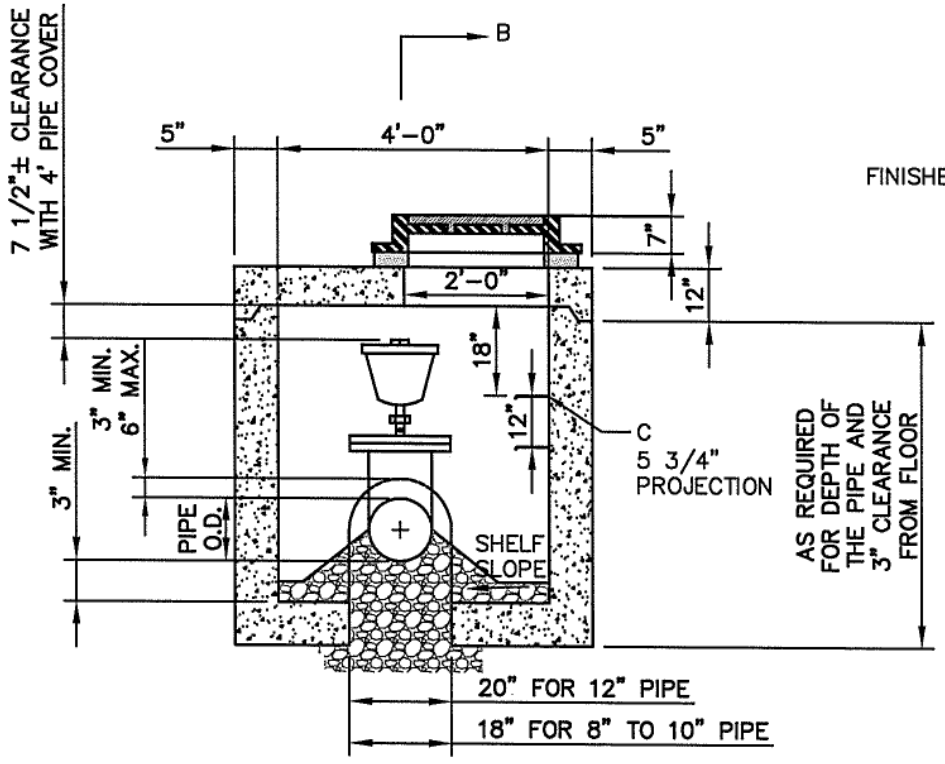

SECTION A

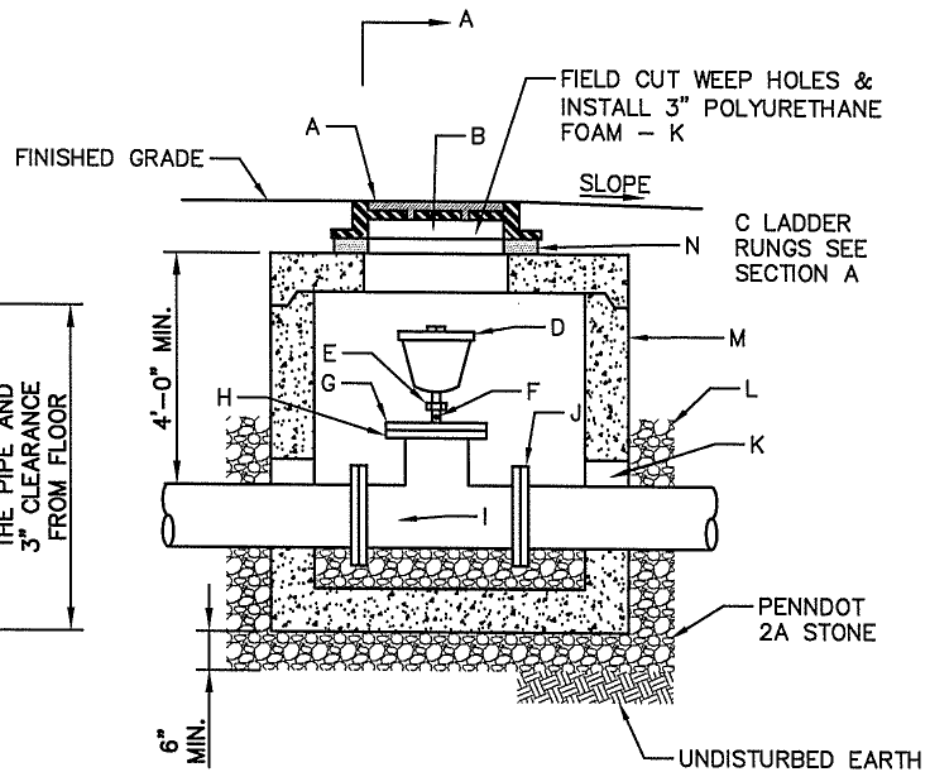

SECTION B

TYPICAL AIR RELEASE VALVE AND DOGHOUSE MANHOLE – OFF ROAD

NOT TO SCALE

A – STANDARD MANHOLE FRAME AND COVER (SEE PRA DETAIL)
B – SEALING SYSTEMS, INC. MANHOLE INSERT, 5" DEEP FOR INSULATION
C – LADDER RUNG, M.A. INDUSTRIES PS4–B
D – AIR RELEASE VALVE – CRISPIN UL20 WITH PROTECTOP
E – 2" HEX NIPPLE 3" LONG, 304 OR 316 STAINLESS STEEL
F – 2" BALL CORPORATION STOP M x FM
G – TAPPED (2") FLANGE
H – 1/8" GASKET
I – COMPACT MJ x FE DUCTILE IRON TEE
J – EBAA MEGALUG (2)
K – POLYURETHANE FOAM INSULATION (ANNULAR OPENING & MANHOLE INSERT)
L – 2A COARSE AGGREGATE
M – 4'–0" DOGHOUSE MANHOLE
N – 24" I.D. MINIMUM GRADE RING IF NEEDED

REVISED 01/07/20
REVISED 11/11/18

AIR RELEASE MANHOLE

PREPARED FOR:

PERKASIE REGIONAL AUTHORITY

ANDERSEN ENGINEERING ASSOCIATES INCORPORATED
150 RIDGE ROAD, SUITE 2
SELLERSVILLE, PA 18960
(215) 257-5711

DSN BY:	P.C.A.
CHK BY:	P.C.A
DATE:	3/8/96
DWG NO.	PRA–W04