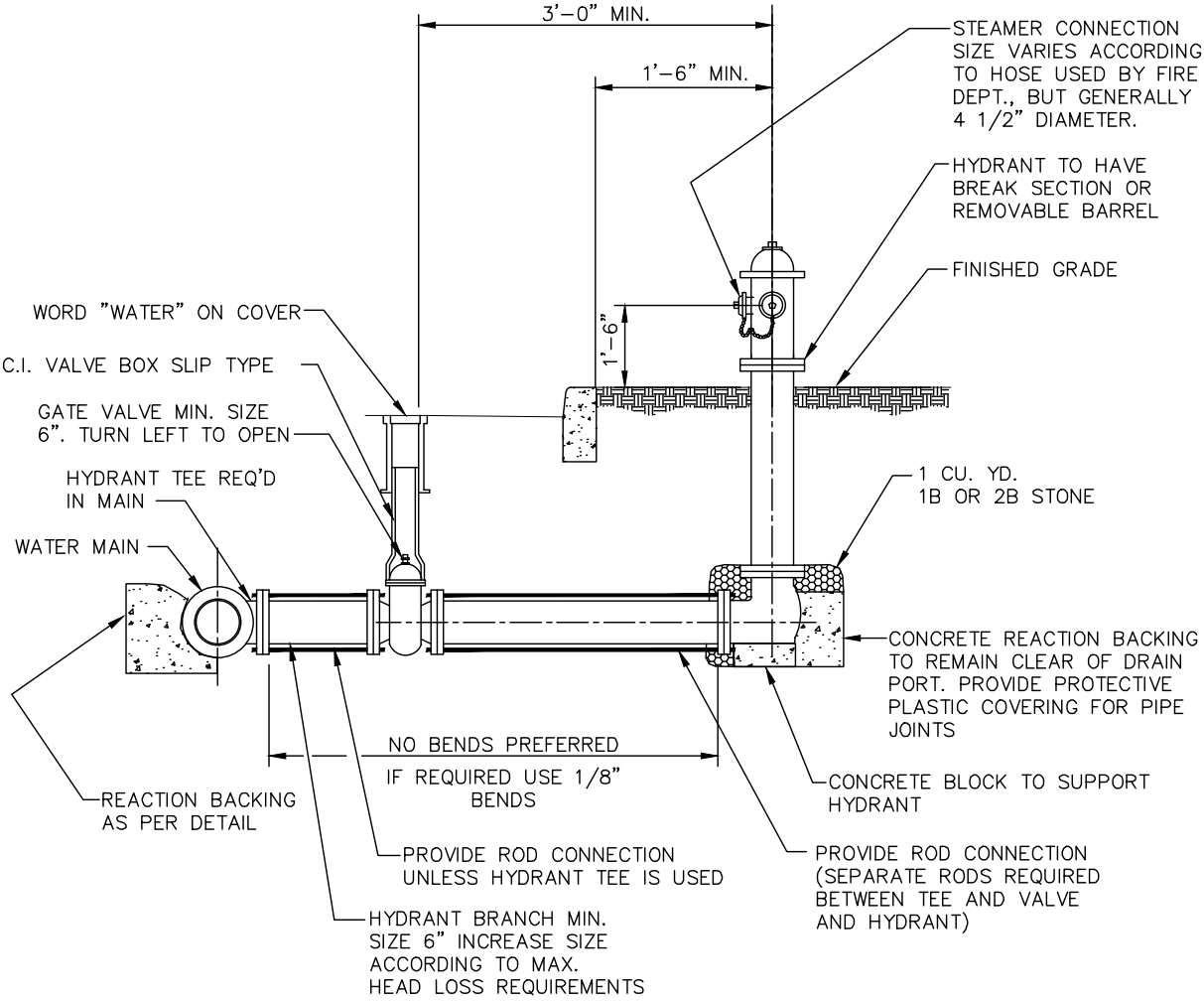

NOTES:

1. MAXIMUM HEAD LOSS 5 LBS. BETWEEN MAIN AND HYDRANT OUTLET FOR 750 GPM FLOW.
2. HYDRANT TO BE PLACED WITH STEAMER CONNECTION FACING STREET @ 1'-6" BEHIND FACE OF CURB OR E.O.P. (TYP.)
3. MEGA-LUG REQUIRED AT VALVE (ON HYDRANT SIDE ONLY IF HYDRANT TEE IS UTILIZED) AND AT HYDRANT.
4. MINIMUM OF 4' OF COVER OVER ALL PIPES.
5. HYDRANT TO HAVE 5 1/4" SEAT OPENING.

FIRE HYDRANT DETAIL

NOT TO SCALE

REVISED 7/4/12

FIRE HYDRANT PREPARED FOR: PERKASIE REGIONAL AUTHORITY	ANDERSEN ENGINEERING ASSOCIATES INCORPORATED 306 NORTH FIFTH STREET, PERKASIE, PA (215) 257-5711	DSN BY:	P.C.A.
		CHK BY:	P.C.A
		DATE:	4/08/96
		DWG NO.	PRA-W01

FILE: PRAW01.DWG